Horizontal / Vertical Rotary Table

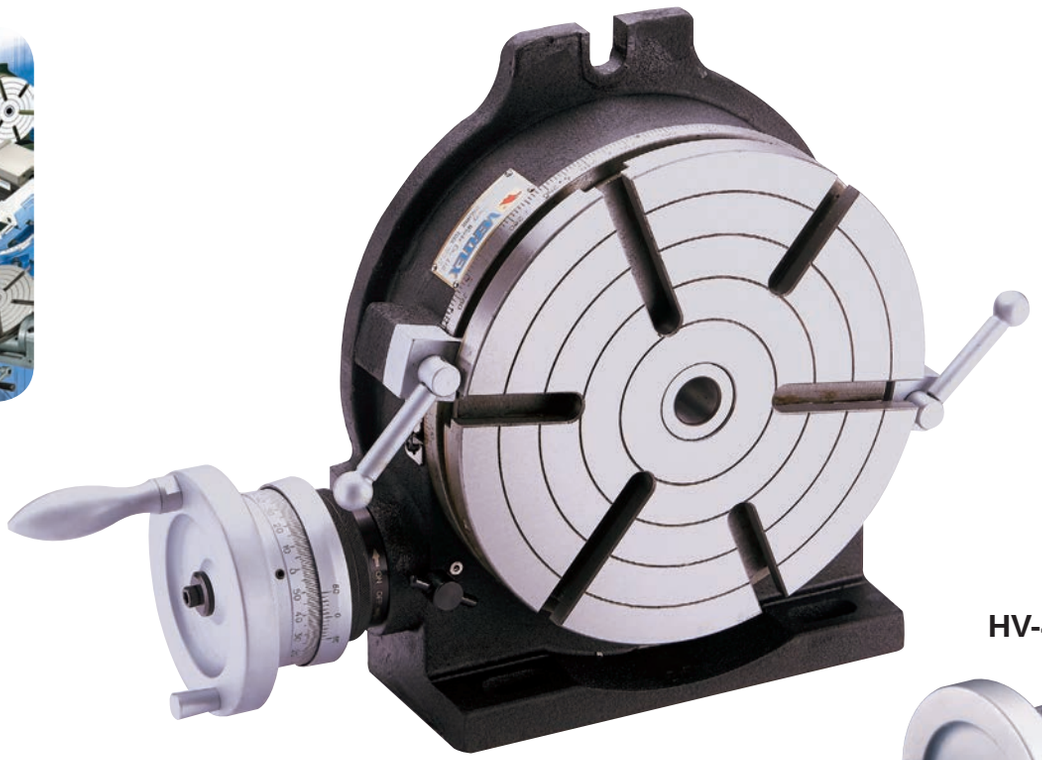

HV-6, 8, 10, 12, 14, 16

HV-4

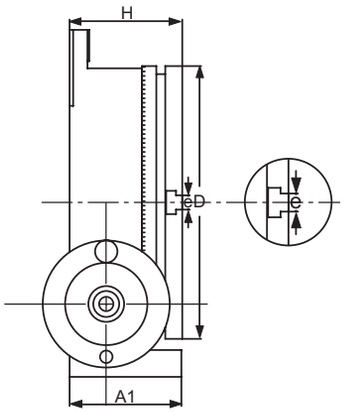

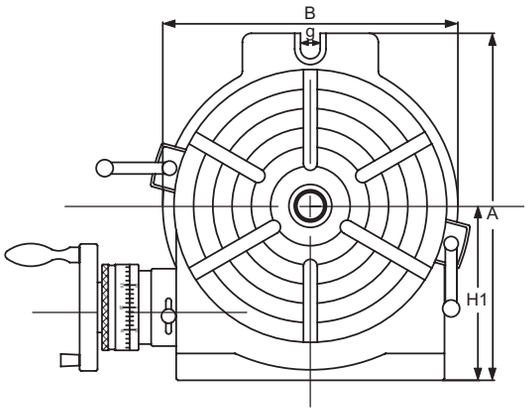

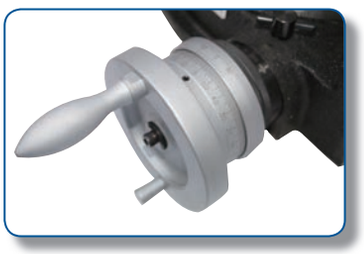

New Model

Specifications

ORDER NO.	Table			Base dimension			Width of T-soft		Bolt slots	The Load Capacity For Rotary Table		Center sleeve	Gross Weight(kg) wooden case(W) Carton(C)		Meas. CFT	CODE NO.
	Outer diameter		Height													
	A1	D	H	H1	A	B	e	Type	g	Horizontal	Vertical		N.W.	G.W.		
HV-4	58	110	72	80	138	118	11	⊕		35 KGS	18 KGS	MT-2	7KGS	7.5KGS (C)	0.3	1001-000
HV-6	78	150	80	102	205	163	11	⊕	17	40 KGS	20 KGS	MT-2	12.1KGS	12.7KGS (C)	0.4	1001-001
HV-8	100	205	102	135	265	219	14	⊕	17	80 KGS	40 KGS	MT-3	24.7KGS	26.2KGS (C)	0.8	1001-002
HV-10	106	254	109	163	321	276	14	⊗	17	90 KGS	50 KGS	MT-3	35.5KGS	37.3KGS (C)	2	1001-003
HV-12	123	305	125	194	388	330	16	⊗	18	120 KGS	60 KGS	MT-4	58.7KGS	69.8KGS (W)	2.6	1001-004
HV-14	123	353	125	225	445	389	16	⊗	18	130 KGS	70 KGS	MT-4	76.61KGS	90.3KGS (W)	3.2	1001-005
HV-16	128	406	130	255	500	435	16	⊗	18	140 KGS	70 KGS	MT-4	106.4KGS	123.1KGS (W)	4.2	1001-006